Pseudo Differential Input, 1 MSPS, 10-/12-Bit ADCs in an 8-Lead SOT-23

AD7441/AD7451

FEATURES

Fast throughput rate: 1 MSPS
Specified for V_{DD} of 2.7 V to 5.25 V
Low power at maximum throughput rate:
4 mW maximum at 1 MSPS with V_{DD} = 3 V
9.25 mW maximum at 1 MSPS with V_{DD} = 5 V
Pseudo differential analog input
Wide input bandwidth:
70 dB SINAD at 100 kHz input frequency
Flexible power/serial clock speed management
No pipeline delays
High speed serial interface:
SPI®-/QSPI™-/MICROWIRE™-/DSP-compatible
Power-down mode: 1 µA maximum
8-lead SOT-23 and MSOP packages

APPLICATIONS

Transducer interface
Battery-powered systems
Data acquisition systems
Portable instrumentation

GENERAL DESCRIPTION

The AD7441/AD7451[1] are, respectively, 10-/12-bit high speed, low power, single-supply, successive approximation (SAR), analog-to-digital converters (ADCs) that feature a pseudo differential analog input. These parts operate from a single 2.7 V to 5.25 V power supply and achieve very low power dissipation at high throughput rates of up to 1 MSPS.

The AD7441/AD7451 contain a low noise, wide bandwidth, differential track-and-hold (T/H) amplifier that handles input frequencies up to 3.5 MHz. The reference voltage for these devices is applied externally to the V_{REF} pin and can range from 100 mV to V_{DD}, depending on the power supply and what suits the application.

The conversion process and data acquisition are controlled using $\overline{CS}$ and the serial clock, allowing the device to interface with microprocessors or DSPs. The input signals are sampled on the falling edge of $\overline{CS}$ when the conversion is initiated. The SAR architecture of these parts ensures that there are no pipeline delays.

[1] Protected by U.S. Patent Number 6,681,332.

FUNCTIONAL BLOCK DIAGRAM

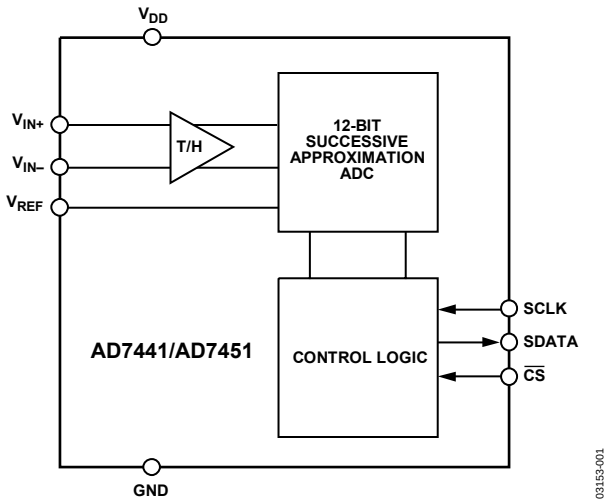

Figure 1.

PRODUCT HIGHLIGHTS

1. Operation with 2.7 V to 5.25 V Power Supplies.
2. High Throughput with Low Power Consumption. With a 3 V supply, the AD7441/AD7451 offer 4 mW maximum power consumption for a 1 MSPS throughput rate.
3. Pseudo Differential Analog Input.
4. Flexible Power/Serial Clock Speed Management. The conversion rate is determined by the serial clock, allowing the power to be reduced as the conversion time is reduced through the serial clock speed increase. These parts also feature a shutdown mode to maximize power efficiency at lower throughput rates.
5. Variable Voltage Reference Input.
6. No Pipeline Delays.
7. Accurate Control of Sampling Instant via $\overline{CS}$ Input and Once-Off Conversion Control.
8. ENOB > 10 Bits Typically with 500 mV Reference.

Rev. C
Information furnished by Analog Devices is believed to be accurate and reliable. However, no responsibility is assumed by Analog Devices for its use, nor for any infringements of patents or other rights of third parties that may result from its use. Specifications subject to change without notice. No license is granted by implication or otherwise under any patent or patent rights of Analog Devices. Trademarks and registered trademarks are the property of their respective owners.

One Technology Way, P.O. Box 9106, Norwood, MA 02062-9106, U.S.A.
Tel: 781.329.4700 **www.analog.com**
Fax: 781.461.3113 **©2003–2007 Analog Devices, Inc. All rights reserved.**

TABLE OF CONTENTS

Features ... 1
Applications ... 1
Functional Block Diagram ... 1
General Description ... 1
Product Highlights ... 1
Revision History ... 2
Specifications ... 3
Timing Specifications ... 7
Timing Diagrams ... 7
Absolute Maximum Ratings ... 8
ESD Caution ... 8
Pin Configurations and Function Descriptions ... 9
Typical Performance Characteristics ... 10
Terminology ... 12
Theory of Operation ... 13
Circuit Information ... 13
Converter Operation ... 13
ADC Transfer Function ... 13
Typical Connection Diagram ... 14
Analog Input ... 14
Analog Input Structure ... 14
Digital Inputs ... 15
Reference ... 15
Serial Interface ... 16
Modes of Operation ... 18
Normal Mode ... 18
Power-Down Mode ... 18
Power vs. Throughput Rate ... 20
Microprocessor and DSP Interfacing ... 20
Grounding and Layout Hints ... 22
Evaluating Performance ... 22
Outline Dimensions ... 23
Ordering Guide ... 24

REVISION HISTORY

3/07—Rev. B to Rev. C

Changes to Table 5 ... 9
Updated Layout ... 12
Changes to Terminology Section ... 12
Updated Outline Dimensions ... 23
Changes to Ordering Guide ... 24

2/05—Rev. A to Rev. B

Changes to Ordering Guide ... 24

2/04—Rev. 0 to Rev. A

Updated Format ... Universal
Changes to General Description ... 1
Changes to Table 1 Footnotes ... 4
Changes to Table 2 Footnotes ... 6
Changes to Table 3 Footnotes ... 7
Changes to Table 5 ... 9
Updated Figures 7, 8, and 9 ... 13
Changes to Figure 23 ... 16
Changes to Reference Section ... 17

9/03—Revision 0: Initial Version

SPECIFICATIONS

V_{DD} = 2.7 V to 5.25 V; f_{SCLK} = 18 MHz; f_S = 1 MSPS; V_{REF} = 2.5 V; T_A = T_{MIN} to T_{MAX}, unless otherwise noted. Temperature ranges for A, B versions: −40°C to +85°C.

Table 1. AD7451

Parameter	Test Conditions/Comments	A Version	B Version	Unit
DYNAMIC PERFORMANCE	f_{IN} = 100 kHz			
Signal-to-Noise Ratio (SNR)[1]	V_{DD} = 2.7 V to 5.25 V	70	70	dB min
Signal-to-(Noise + Distortion) (SINAD)[1]	V_{DD} = 2.7 V to 3.6 V	69	69	dB min
	V_{DD} = 4.75 V to 5.25 V	70	70	dB min
Total Harmonic Distortion (THD)[1]	V_{DD} = 2.7 V to 3.6 V; −78 dB typ	−73	−73	dB max
	V_{DD} = 4.75 V to 5.25 V; −80 dB typ	−75	−75	dB max
Peak Harmonic or Spurious Noise[1]	V_{DD} = 2.7 V to 3.6 V; −80 dB typ	−73	−73	dB max
	V_{DD} = 4.75 V to 5.25 V; −82 dB typ	−75	−75	dB max
Intermodulation Distortion (IMD)[1]	fa = 90 kHz; fb = 110 kHz			
Second-Order Terms		−80	−80	dB typ
Third-Order Terms		−80	−80	dB typ
Aperture Delay[1]		5	5	ns typ
Aperture Jitter[1]		50	50	ps typ
Full-Power Bandwidth[1, 2]	@ −3 dB	20	20	MHz typ
	@ −0.1 dB	2.5	2.5	MHz typ
DC ACCURACY				
Resolution		12	12	Bits
Integral Nonlinearity (INL)[1]		±1.5	±1	LSB max
Differential Nonlinearity (DNL)[1]	Guaranteed no missed codes to 12 bits	±0.95	±0.95	LSB max
Offset Error[1]		±3.5	±3.5	LSB max
Gain Error[1]		±3	±3	LSB max
ANALOG INPUT				
Full-Scale Input Span	V_{IN+} − V_{IN-}	V_{REF}	V_{REF}	V
Absolute Input Voltage				
V_{IN+}		V_{REF}	V_{REF}	V
V_{IN-}[3]	V_{DD} = 2.7 V to 3.6 V	−0.1 to +0.4	−0.1 to +0.4	V
	V_{DD} = 4.75 V to 5.25 V	−0.1 to +1.5	−0.1 to +1.5	V
DC Leakage Current		±1	±1	µA max
Input Capacitance	When in track-and-hold	30/10	30/10	pF typ
REFERENCE INPUT				
V_{REF} Input Voltage[4]	±1% tolerance for specified performance	2.5	2.5	V
DC Leakage Current		±1	±1	µA max
V_{REF} Input Capacitance	When in track-and-hold	10/30	10/30	pF typ
LOGIC INPUTS				
Input High Voltage, V_{INH}		2.4	2.4	V min
Input Low Voltage, V_{INL}		0.8	0.8	V max
Input Current, I_{IN}	Typically 10 nA, V_{IN} = 0 V or V_{DD}	±1	±1	µA max
Input Capacitance, C_{IN}[5]		10	10	pF max
LOGIC OUTPUTS				
Output High Voltage, V_{OH}	V_{DD} = 4.75 V to 5.25 V; I_{SOURCE} = 200 µA	2.8	2.8	V min
	V_{DD} = 2.7 V to 3.6 V; I_{SOURCE} = 200 µA	2.4	2.4	V min
Output Low Voltage, V_{OL}	I_{SINK} = 200 µA	0.4	0.4	V max
Floating-State Leakage Current		±1	±1	µA max
Floating-State Output Capacitance[5]		10	10	pF max
Output Coding		Straight (natural) binary	Straight (natural) binary	

Parameter	Test Conditions/Comments	A Version	B Version	Unit
CONVERSION RATE				
Conversion Time	888 ns with an 18 MHz SCLK	16	16	SCLK cycles
Track-and-Hold Acquisition Time[1]	Sine wave input	250	250	ns max
	Full-scale step input	290	290	ns max
Throughput Rate		1	1	MSPS max
POWER REQUIREMENTS				
V_{DD}		2.7/5.25	2.7/5.25	V min/max
I_{DD}[6, 7]				
Normal Mode (Static)	SCLK on or off	0.5	0.5	mA typ
Normal Mode (Operational)	V_{DD} = 4.75 V to 5.25 V	1.95	1.95	mA max
	V_{DD} = 2.7 V to 3.6 V	1.45	1.45	mA max
Full Power-Down Mode	SCLK on or off	1	1	µA max
Power Dissipation				
Normal Mode (Operational)	V_{DD} = 5 V; 1.55 mW typical for 100 ksps[6]	9.25	9.25	mW max
	V_{DD} = 3 V; 0.6 mW typical for 100 ksps[6]	4	4	mW max
Full Power-Down	V_{DD} = 5 V; SCLK on or off	5	5	µW max
	V_{DD} = 3 V; SCLK on or off	3	3	µW max

[1] See Terminology section.
[2] Analog inputs with slew rates exceeding 27 V/µs (full-scale input sine wave > 3.5 MHz) within the acquisition time can cause the converter to return an incorrect result.
[3] A small dc input is applied to V_{IN-} to provide a pseudo ground for V_{IN+}.
[4] The AD7451 is functional with a reference input in the range of 100 mV to V_{DD}.
[5] Guaranteed by characterization.
[6] See the Power vs. Throughput Rate section.
[7] Measured with a full-scale dc input.

V_{DD} = 2.7 V to 5.25 V; f_{SCLK} = 18 MHz; f_S = 1 MSPS; V_{REF} = 2.5 V; T_A = T_{MIN} to T_{MAX}, unless otherwise noted. Temperature range for B version: −40°C to +85°C.

Table 2. AD7441

Parameter	Test Conditions/Comments	B Version	Unit
DYNAMIC PERFORMANCE	f_{IN} = 100 kHz		
Signal-to-(Noise + Distortion) (SINAD)[1]		61	dB min
Total Harmonic Distortion (THD)[1]	2.7 V to 3.6 V; −77 dB typical	−72	dB max
	4.75 V to 5.25 V; −79 dB typical	−73	dB max
Peak Harmonic or Spurious Noise[1]	2.7 V to 3.6 V; −80 dB typical	−72	dB max
	4.75 V to 5.25 V; −82 dB typical	−74	dB max
Intermodulation Distortion (IMD)[1]	fa = 90 kHz, fb = 110 kHz		
Second-Order Terms		−80	dB typ
Third-Order Terms		−80	dB typ
Aperture Delay[1]		5	ns typ
Aperture Jitter[1]		50	ps typ
Full-Power Bandwidth[1, 2]	@ −3 dB	20	MHz typ
	@ −0.1 dB	2.5	MHz typ
DC ACCURACY			
Resolution		10	Bits
Integral Nonlinearity (INL)[1]		±0.5	LSB max
Differential Nonlinearity (DNL)[1]	Guaranteed no missed codes to 10 bits	±0.5	LSB max
Offset Error[1]		±1	LSB max
Gain Error[1]		±1	LSB max
ANALOG INPUT			
Full-Scale Input Span	$V_{IN+} - V_{IN-}$	V_{REF}	V
Absolute Input Voltage			
V_{IN+}		V_{REF}	V
V_{IN-}[3]	V_{DD} = 2.7 V to 3.6 V	−0.1 to +0.4	V
	V_{DD} = 4.75 V to 5.25 V	−0.1 to +1.5	V
DC Leakage Current		±1	µA max
Input Capacitance	When in track-and-hold	30/10	pF typ
REFERENCE INPUT			
V_{REF} Input Voltage[4]	±1% tolerance for specified performance	2.5	V
DC Leakage Current		±1	µA max
V_{REF} Input Capacitance	When in track-and-hold	10/30	pF typ
LOGIC INPUTS			
Input High Voltage, V_{INH}		2.4	V min
Input Low Voltage, V_{INL}		0.8	V max
Input Current, I_{IN}	Typically 10 nA, V_{IN} = 0 V or V_{DD}	±1	µA max
Input Capacitance, C_{IN}[5]		10	pF max
LOGIC OUTPUTS			
Output High Voltage, V_{OH}	V_{DD} = 4.75 V to 5.25 V; I_{SOURCE} = 200 µA	2.8	V min
	V_{DD} = 2.7 V to 3.6 V; I_{SOURCE} = 200 µA	2.4	V min
Output Low Voltage, V_{OL}	I_{SINK} = 200 µA	0.4	V max
Floating-State Leakage Current		±1	µA max
Floating-State Output Capacitance[5]		10	pF max
Output Coding		Straight (natural) binary	

Parameter	Test Conditions/Comments	B Version	Unit
CONVERSION RATE			
Conversion Time	888 ns with an 18 MHz SCLK	16	SCLK cycles
Track-and-Hold Acquisition Time[1]	Sine wave input	250	ns max
	Step input	290	ns max
Throughput Rate		1	MSPS max
POWER REQUIREMENTS			
V_{DD}		2.7/5.25	V min/max
I_{DD}[6, 7]			
Normal Mode (Static)	SCLK on or off	0.5	mA typ
Normal Mode (Operational)	V_{DD} = 4.75 V to 5.25 V	1.95	mA max
	V_{DD} = 2.7 V to 3.6 V	1.25	mA max
Full Power-Down Mode	SCLK on or off	1	μA max
Power Dissipation			
Normal Mode (Operational)	V_{DD} = 5 V; 1.55 mW typ for 100 ksps[6]	9.25	mW max
	V_{DD} = 3 V; 0.6 mW typ for 100 ksps[6]	4	mW max
Full Power-Down	V_{DD} = 5 V; SCLK on or off	5	μW max
	V_{DD} = 3 V; SCLK on or off	3	μW max

[1] See the Terminology section.
[2] Analog inputs with slew rates exceeding 27 V/μs (full-scale input sine wave > 3.5 MHz) within the acquisition time can cause the converter to return an incorrect result.
[3] A small dc input is applied to V_{IN-} to provide a pseudo ground for V_{IN+}.
[4] The AD7441 is functional with a reference input in the range 100 mV to V_{DD}.
[5] Guaranteed by characterization.
[6] See the Power vs. Throughput Rate section.
[7] Measured with a full-scale dc input.

TIMING SPECIFICATIONS[1]

V_{DD} = 2.7 V to 5.25 V; f_{SCLK} = 18 MHz; f_S = 1 MSPS; V_{REF} = 2.5 V; T_A = T_{MIN} to T_{MAX}, unless otherwise noted.

Table 3.

Parameter	Limit at T_{MIN}, T_{MAX}	Unit	Description
f_{SCLK}[2]	10	kHz min	
	18	MHz max	
$t_{CONVERT}$	16 × t_{SCLK}		t_{SCLK} = 1/f_{SCLK}
	888	ns max	
t_{QUIET}	60	ns min	Minimum quiet time between end of a serial read and next falling edge of $\overline{CS}$
t_1	10	ns min	Minimum $\overline{CS}$ pulse width
t_2	10	ns min	$\overline{CS}$ falling edge to SCLK falling edge setup time
t_3[3]	20	ns max	Delay from $\overline{CS}$ falling edge until SDATA three-state disabled
t_4	40	ns max	Data access time after SCLK falling edge
t_5	0.4 t_{SCLK}	ns min	SCLK high pulse width
t_6	0.4 t_{SCLK}	ns min	SCLK low pulse width
t_7	10	ns min	SCLK edge to data valid hold time
t_8[4]	10	ns min	SCLK falling edge to SDATA, three-state enabled
	35	ns max	SCLK falling edge to SDATA, three-state enabled
$t_{POWER-UP}$[5]	1	µs max	Power-up time from full power-down

[1] Guaranteed by characterization. All input signals are specified with t_{RISE} = t_{FALL} = 5 ns (10% to 90% of V_{DD}) and timed from a voltage level of 1.6 V. See Figure 2, Figure 3, and the Serial Interface section.
[2] Mark/space ratio for the SCLK input is 40/60 to 60/40.
[3] Measured with the load circuit of Figure 4 and defined as the time required for the output to cross 0.8 V or 2.4 V with V_{DD} = 5 V and the time required for an output to cross 0.4 V or 2.0 V for V_{DD} = 3 V.
[4] t_8 is derived from the measured time taken by the data outputs to change 0.5 V when loaded with the circuit of Figure 4. The measured number is then extrapolated back to remove the effects of charging or discharging the 25 pF capacitor. This means that the time (t_8) quoted in the timing characteristics is the true bus relinquish time of the part and is independent of the bus loading.
[5] See the Power-Up Time section.

TIMING DIAGRAMS

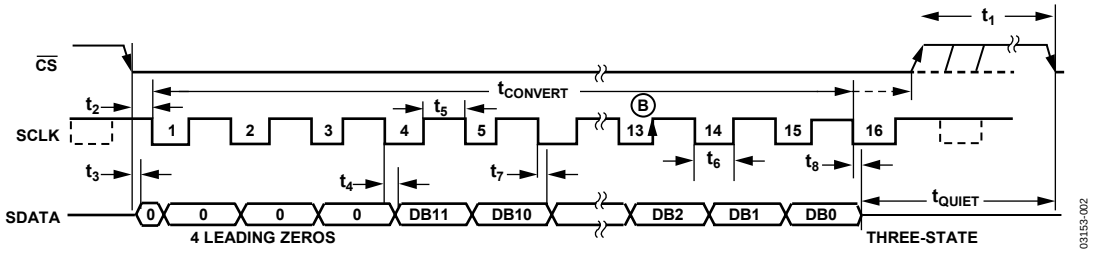

Figure 2. AD7451 Serial Interface Timing Diagram

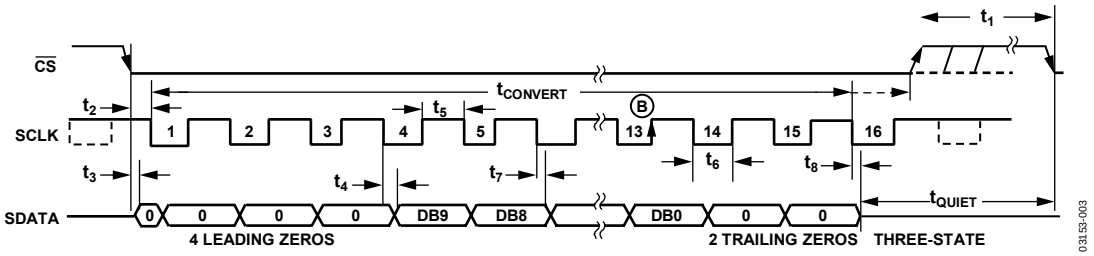

Figure 3. AD7441 Serial Interface Timing Diagram

ABSOLUTE MAXIMUM RATINGS

T_A = 25°C, unless otherwise noted.

Table 4.

Parameter	Rating
V_{DD} to GND	−0.3 V to +7 V
V_{IN+} to GND	−0.3 V to V_{DD} + 0.3 V
V_{IN-} to GND	−0.3 V to V_{DD} + 0.3 V
Digital Input Voltage to GND	−0.3 V to +7 V
Digital Output Voltage to GND	−0.3 V to V_{DD} + 0.3 V
V_{REF} to GND	−0.3 V to V_{DD} + 0.3 V
Input Current to any Pin Except Supplies[1]	±10 mA
Operating Temperature Range Commercial (A, B Version)	−40°C to +85°C
Storage Temperature Range	−65°C to +150°C
Junction Temperature	150°C
θ_{JA} Thermal Impedance	205.9°C/W (MSOP)
	211.5°C/W (SOT-23)
θ_{JC} Thermal Impedance	43.74°C/W (MSOP)
	91.99°C/W (SOT-23)
Lead Temperature, Soldering	
Vapor Phase (60 sec)	215°C
Infrared (15 sec)	220°C
ESD	1 kV

[1] Transient currents of up to 100 mA do not cause SCR latch-up.

Stresses above those listed under Absolute Maximum Ratings may cause permanent damage to the device. This is a stress rating only; functional operation of the device at these or any other conditions above those indicated in the operational section of this specification is not implied. Exposure to absolute maximum rating conditions for extended periods may affect device reliability.

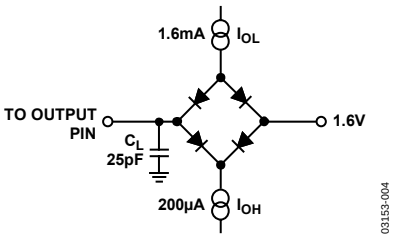

Figure 4. Load Circuit for Digital Output Timing Specifications

ESD CAUTION



ESD (electrostatic discharge) sensitive device. Charged devices and circuit boards can discharge without detection. Although this product features patented or proprietary protection circuitry, damage may occur on devices subjected to high energy ESD. Therefore, proper ESD precautions should be taken to avoid performance degradation or loss of functionality.

PIN CONFIGURATIONS AND FUNCTION DESCRIPTIONS

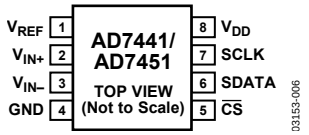

Figure 5. 8-Lead MSOP Pin Configuration

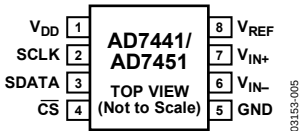

Figure 6. 8-Lead SOT-23 Pin Configuration

Table 5. Pin Function Descriptions

Pin. No.			
MSOP	**SOT-23**	**Mnemonic**	**Description**
1	8	V_{REF}	Reference Input for the AD7441/AD7451. An external reference in the range of 100 mV to V_{DD} must be applied to this input. The specified reference input is 2.5 V. This pin is decoupled to GND with a capacitor of at least 0.1 µF.
2	7	V_{IN+}	Noninverting Analog Input.
3	6	V_{IN-}	Inverting Input. This pin sets the ground reference point for the V_{IN+} input. Connect to ground or to a dc offset to provide a pseudo ground.
4	5	GND	Analog Ground. Ground reference point for all circuitry on the AD7441/AD7451. All analog input signals and any external reference signal are referred to this GND voltage.
5	4	$\overline{CS}$	Chip Select. Active low logic input. This input provides the dual function of initiating a conversion on the AD7441/AD7451 and framing the serial data transfer.
6	3	SDATA	Serial Data, Logic Output. The conversion result from the AD7441/AD7451 is provided on this output as a serial data stream. The bits are clocked out on the falling edge of the SCLK input. The data stream of the AD7451 consists of four leading zeros followed by the 12 bits of conversion data that are provided MSB first; the data stream of the AD7441 consists of four leading zeros, followed by the 10 bits of conversion data, followed by two trailing zeros. In both cases, the output coding is straight (natural) binary.
7	2	SCLK	Serial Clock, Logic Input. SCLK provides the serial clock for accessing data from the part. This clock input is also used as the clock source for the conversion process.
8	1	V_{DD}	Power Supply Input. V_{DD} is 2.7 V to 5.25 V. This supply is decoupled to GND with a 0.1 µF capacitor and a 10 µF tantalum capacitor.

TYPICAL PERFORMANCE CHARACTERISTICS

T_A = 25°C, f_S = 1 MSPS, f_{SCLK} = 18 MHz, V_{DD} = 2.7 V to 5.25 V, V_{REF} = 2.5 V, unless otherwise noted.

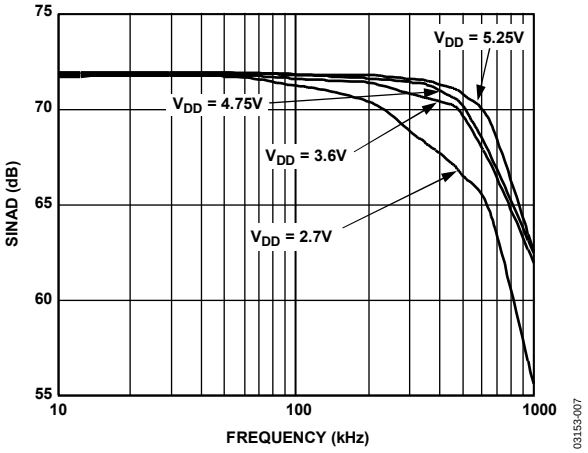

Figure 7. SINAD vs. Analog Input Frequency for the AD7451 for Various Supply Voltages

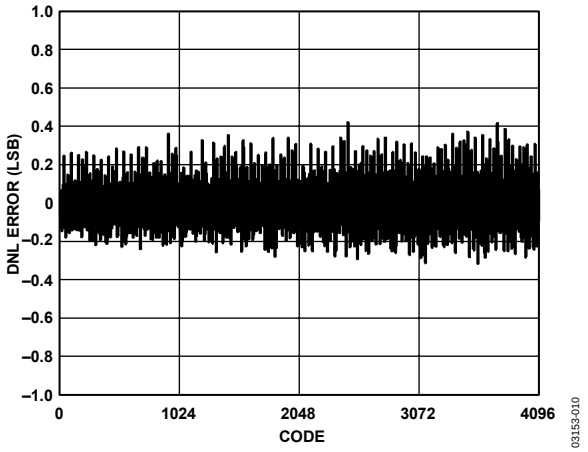

Figure 10. Typical DNL for the AD7451 for V_{DD} = 5 V

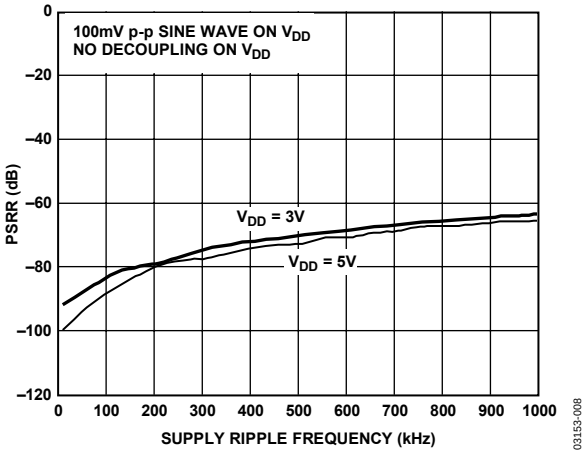

Figure 8. PSRR vs. Supply Ripple Frequency Without Supply Decoupling

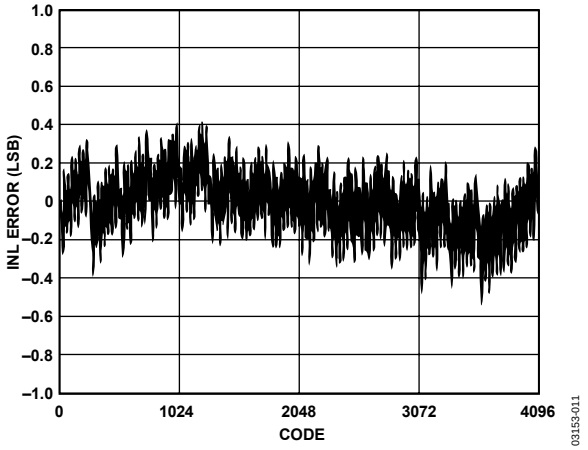

Figure 11. Typical INL for the AD7451 for V_{DD} = 5 V

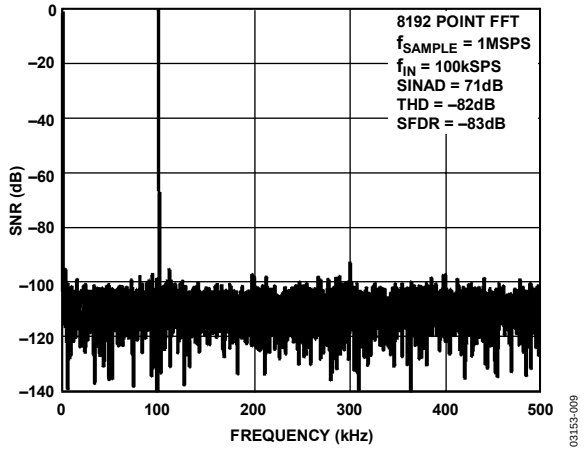

Figure 9. AD7451 Dynamic Performance for V_{DD} = 5 V

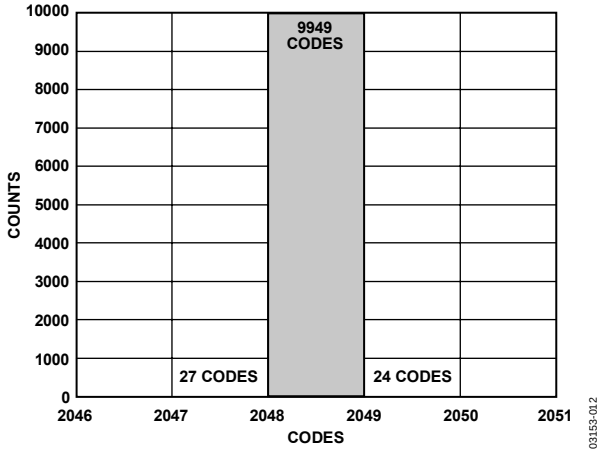

Figure 12. Histogram of 10,000 Conversions of a DC Input for the AD7451

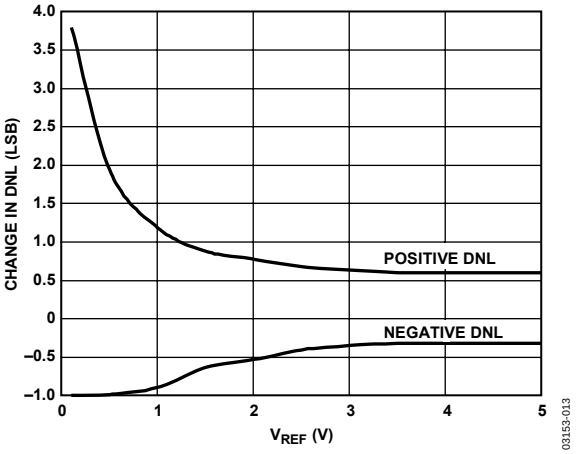

Figure 13. Change in DNL vs. V_{REF} for V_{DD} = 5 V

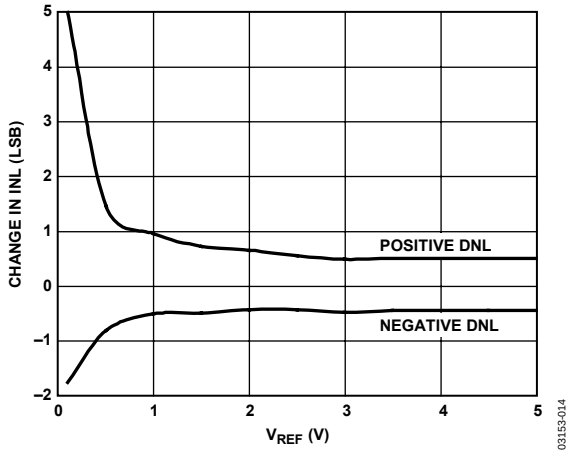

Figure 14. Change in INL vs. V_{REF} for V_{DD} = 5 V

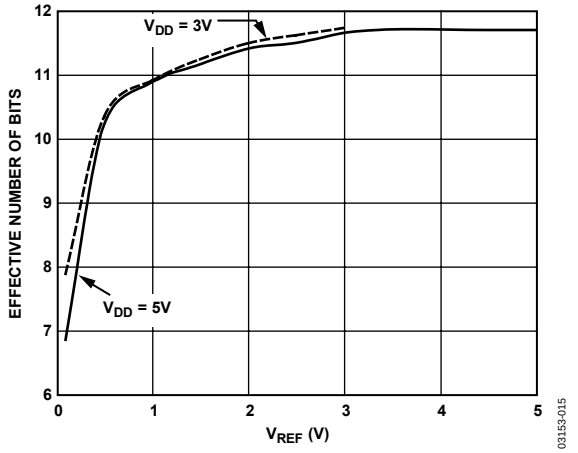

Figure 15. ENOB vs. V_{REF} for V_{DD} = 5 V and 3 V

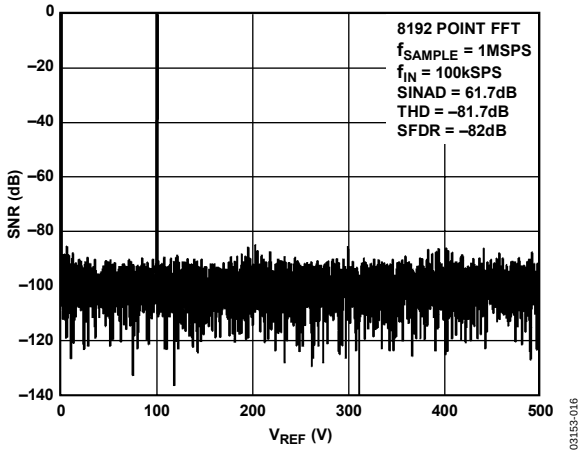

Figure 16. AD7441 Dynamic Performance

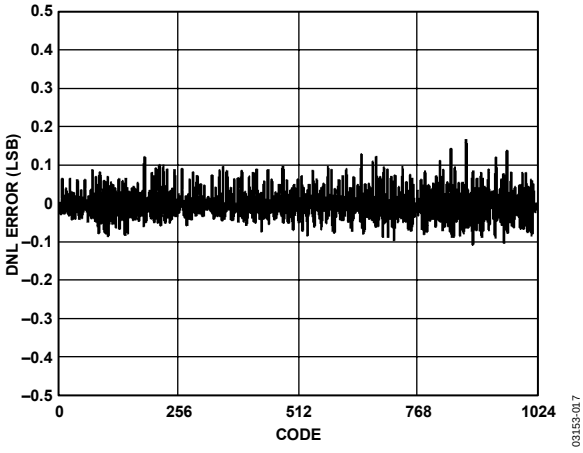

Figure 17. Typical DNL for the AD7441

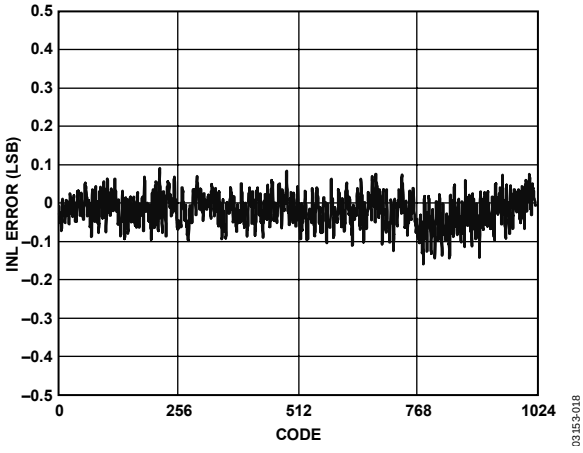

Figure 18. Typical INL for the AD7441

TERMINOLOGY

Signal-to-(Noise + Distortion) Ratio (SINAD)
This is the measured ratio of SINAD at the output of the ADC. The signal is the rms amplitude of the fundamental. Noise is the sum of all nonfundamental signals up to half the sampling frequency ($f_S/2$), excluding dc. The ratio is dependent on the number of quantization levels in the digitization process: the more levels, the smaller the quantization noise. The theoretical SINAD ratio for an ideal N-bit converter with a sine wave input is given by

$$Signal\text{-}to\text{-}(Noise + Distortion) = (6.02\ N + 1.76)\ \text{dB}$$

Therefore, for 12-bit converters, the SINAD is 74 dB; for 10-bit converters, the SINAD is 62 dB.

Total Harmonic Distortion (THD)

THD is the ratio of the rms sum of harmonics to the fundamental. In the AD7441/AD7451, THD is

$$THD\ (\text{dB}) = 20 \log \frac{\sqrt{V_2^2 + V_3^2 + V_4^2 + V_5^2 + V_6^2}}{V_1}$$

where:
V_1 is the rms amplitude of the fundamental.
V_2, V_3, V_4, V_5, and V_6 are the rms amplitudes of the second to the sixth harmonics.

Peak Harmonic or Spurious Noise
Peak harmonic (spurious noise) is defined as the ratio of the rms value of the next largest component in the ADC output spectrum (up to $f_S/2$, excluding dc) to the rms value of the fundamental. Normally, the value of this specification is determined by the largest harmonic in the spectrum, but for ADCs where the harmonics are buried in the noise floor, it is a noise peak.

Intermodulation Distortion
With inputs consisting of sine waves at two frequencies, fa and fb, an active device with nonlinearities creates distortion products at sum and difference frequencies of mfa ± nfb where m, n = 0, 1, 2, 3, and so on. Intermodulation distortion terms are those in which neither m nor n are equal to zero. For example, the second-order terms include (fa + fb) and (fa − fb), while the third-order terms include (2fa + fb), (2fa − fb), (fa + 2fb), and (fa − 2fb).

The AD7441/AD7451 are tested using the CCIF standard where two input frequencies near the top end of the input bandwidth are used. In this case, the second-order terms are usually distanced in frequency from the original sine waves while the third-order terms are usually at a frequency close to the input frequencies. As a result, the second- and third-order terms are specified separately. The calculation of the intermodulation distortion is as per the THD specification where it is the ratio of the rms sum of the individual distortion products to the rms amplitude of the sum of the fundamentals expressed in decibels.

Aperture Delay
This is the amount of time from the leading edge of the sampling clock until the ADC actually takes the sample.

Aperture Jitter
This is the sample-to-sample variation in the effective point in time at which the actual sample is taken.

Full Power Bandwidth
The full power bandwidth of an ADC is that input frequency at which the amplitude of the reconstructed fundamental is reduced by 0.1 dB or 3 dB for a full-scale input.

Integral Nonlinearity (INL)
This is the maximum deviation from a straight line passing through the endpoints of the ADC transfer function.

Differential Nonlinearity (DNL)
This is the difference between the measured and the ideal 1 LSB change between any two adjacent codes in the ADC.

Offset Error
This is the deviation of the first code transition (000…000 to 000…001) from the ideal (that is, AGND + 1 LSB).

Gain Error
This is the deviation of the last code transition (111…110 to 111…111) from the ideal (that is, V_{REF} − 1 LSB) after the offset error has been adjusted out.

Track-and-Hold Acquisition Time
The track-and-hold acquisition time is the minimum time required for the track-and-hold amplifier to remain in track mode for its output to reach and settle to within 0.5 LSB of the applied input signal.

Power Supply Rejection Ratio (PSRR)
The power supply rejection ratio is defined as the ratio of the power in the ADC output at full-scale frequency (f) to the power of a 100 mV p-p sine wave applied to the ADC V_{DD} supply of Frequency f_S. The frequency of this input varies from 1 kHz to 1 MHz.

$$PSRR\ (\text{dB}) = 10\log(Pf/Pfs)$$

where:
Pf is the power at Frequency *f* in the ADC output.
Pfs is the power at Frequency *fs* in the ADC output.

THEORY OF OPERATION

CIRCUIT INFORMATION

The AD7441/AD7451 are 10-/12-bit, high speed, low power, single-supply, successive approximation, analog-to-digital converters (ADCs) with a pseudo differential analog input. These parts operate with a single 2.7 V to 5.25 V power supply and are capable of throughput rates up to 1 MSPS when supplied with an 18 MHz SCLK. The AD7441/AD7451 require an external reference to be applied to the V_{REF} pin.

The AD7441/AD7451 have a SAR ADC, an on-chip differential track-and-hold amplifier, and a serial interface housed in either an 8-lead SOT-23 or an MSOP package. The serial clock input accesses data from the part and provides the clock source for the SAR ADC. The AD7441/AD7451 feature a power-down option for reduced power consumption between conversions. The power-down feature is implemented across the standard serial interface, as described in the Modes of Operation section.

CONVERTER OPERATION

The AD7441/AD7451 are SAR ADCs based around two capacitive DACs. Figure 19 and Figure 20 show simplified schematics of the ADC in the acquisition and conversion phase, respectively. The ADC is comprised of control logic, an SAR, and two capacitive DACs. In Figure 19 (acquisition phase), SW3 is closed, SW1 and SW2 are in Position A, the comparator is held in a balanced condition, and the sampling capacitor arrays acquire the differential signal on the input.

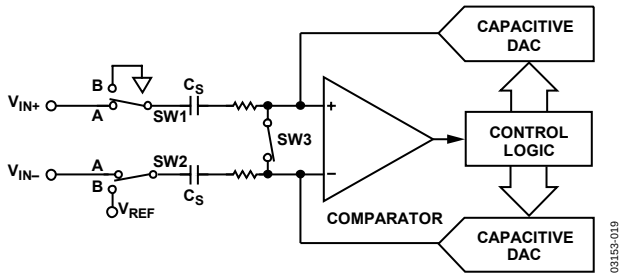

Figure 19. ADC Acquisition Phase

When the ADC starts a conversion (see Figure 20), SW3 opens and SW1 and SW2 move to Position B, causing the comparator to become unbalanced. Both inputs are disconnected once the conversion begins. The control logic and the charge redistribution DACs are used to add and subtract fixed amounts of charge from the sampling capacitor arrays to bring the comparator back into a balanced condition. When the comparator is rebalanced, the conversion is complete. The control logic generates the ADC output code. The output impedances of the sources driving the V_{IN+} and V_{IN-} pins must be matched; otherwise the two inputs have different settling times, resulting in errors.

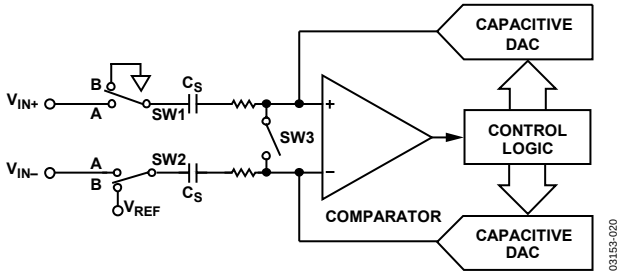

Figure 20. ADC Conversion Phase

ADC TRANSFER FUNCTION

The output coding for the AD7441/AD7451 is straight (natural) binary. The designed code transitions occur at successive LSB values (1 LSB, 2 LSB, and so on). The LSB size of the AD7451 is $V_{REF}/4096$, and the LSB size of the AD7441 is $V_{REF}/1024$. The ideal transfer characteristic of the AD7441/AD7451 is shown in Figure 21.

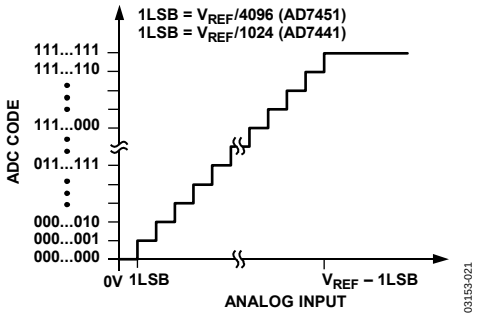

Figure 21. AD7441/AD7451 Ideal Transfer Characteristic

TYPICAL CONNECTION DIAGRAM

Figure 22 shows a typical connection diagram for the device. In this setup, the GND pin is connected to the analog ground plane of the system. The V_{REF} pin is connected to the AD780, a 2.5 V decoupled reference source. The signal source is connected to the V_{IN+} analog input via a unity gain buffer. A dc voltage is connected to the V_{IN-} pin to provide a pseudo ground for the V_{IN+} input. The V_{DD} pin is decoupled to AGND with a 10 µF tantalum capacitor in parallel with a 0.1 µF ceramic capacitor. The reference pin is decoupled to AGND with a capacitor of at least 0.1 µF. The conversion result is output in a 16-bit word with four leading zeros followed by the MSB of the 12-bit or 10-bit result. The 10-bit result of the AD7441 is followed by two trailing zeros.

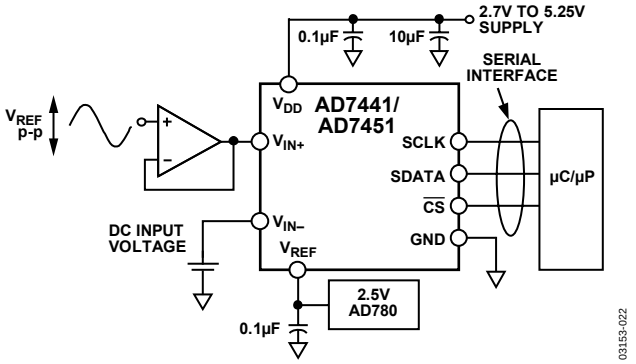

Figure 22. Typical Connection Diagram

ANALOG INPUT

The AD7441/AD7451 have a pseudo differential analog input. The V_{IN+} input is coupled to the signal source and must have an amplitude of V_{REF} p-p to make use of the full dynamic range of the part. A dc input is applied to the V_{IN-}. The voltage applied to this input provides an offset from ground or a pseudo ground for the V_{IN+} input. Pseudo differential inputs separate the analog input signal ground from the ADC ground, allowing dc common-mode voltages to be cancelled.

Because the ADC operates from a single supply, it is necessary to level shift ground-based bipolar signals to comply with the input requirements. An op amp (for example, the AD8021) can be configured to rescale and level shift a ground-based (bipolar) signal so that it is compatible with the input range of the AD7441/ AD7451 (see Figure 23).

When a conversion takes place, the pseudo ground corresponds to 0, and the maximum analog input corresponds to 4096 for the AD7451 and 1024 for the AD7441.

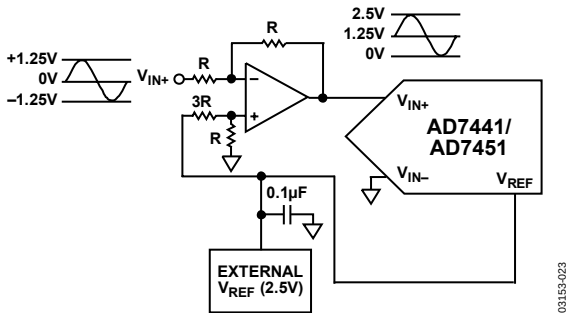

Figure 23. Op Amp Configuration to Level Shift a Bipolar Input Signal

ANALOG INPUT STRUCTURE

Figure 24 shows the equivalent circuit of the analog input structure of the AD7441/AD7451. The four diodes provide ESD protection for the analog inputs. Care must be taken to ensure that the analog input signals never exceed the supply rails by more than 300 mV. This causes these diodes to become forward-biased and start conducting into the substrate. These diodes can conduct up to 10 mA without causing irreversible damage to the part. The C1 capacitors (see Figure 24) are typically 4 pF and can be attributed primarily to pin capacitance. The resistors are lumped components made up of the on resistance of the switches. The value of these resistors is typically about 100 Ω. The C2 capacitors are the ADC sampling capacitors and have a capacitance of 16 pF typically.

For ac applications, removing high frequency components from the analog input signal through the use of an RC low-pass filter on the relevant analog input pins is recommended. In applications where harmonic distortion and the signal-to-noise ratio are critical, it is recommended that the analog input be driven from a low impedance source. Large source impedances significantly affect the ac performance of the ADC, which can necessitate the use of an input buffer amplifier. The choice of the amplifier is a function of the particular application.

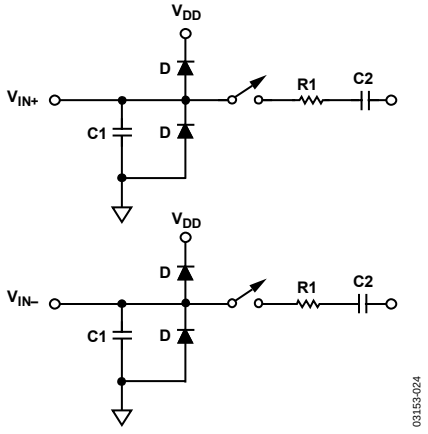

Figure 24. Equivalent Analog Input Circuit; Conversion Phase—Switches Open; Track Phase—Switches Closed

When no amplifier is used to drive the analog input, it is recommended that the source impedance be limited to low values. The maximum source impedance depends on the amount of total harmonic distortion that can be tolerated. The THD increases as the source impedance increases and performance degrades.

Figure 25 shows a graph of THD vs. analog input signal frequency for different source impedances.

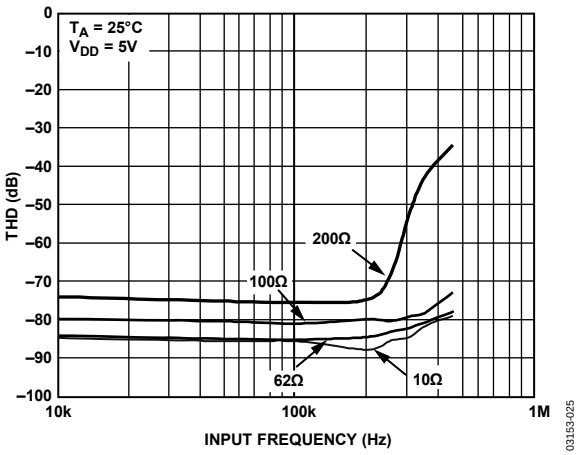

Figure 25. THD vs. Analog Input Frequency for Various Source Impedances

Figure 26 shows a graph of THD vs. analog input frequency for various supply voltages while sampling at 1 MSPS with an SCLK of 18 MHz. In this case, the source impedance is 10 Ω.

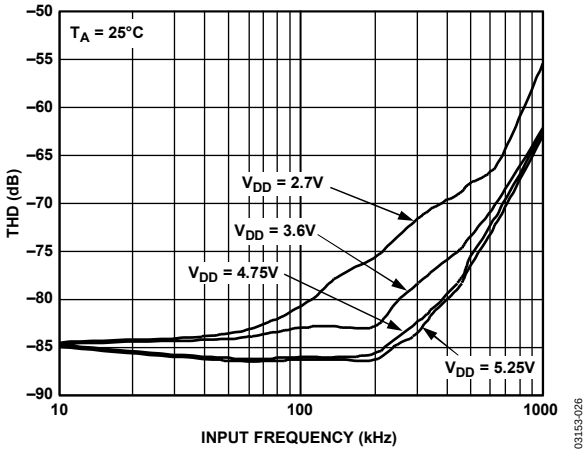

Figure 26. THD vs. Analog Input Frequency for Various Supply Voltages

DIGITAL INPUTS

The digital inputs applied to the AD7441/AD7451 are not limited by the maximum ratings that limit the analog inputs. Instead, the digital inputs applied, that is, $\overline{CS}$ and SCLK, can go to 7 V and are not restricted by the V_{DD} + 0.3 V limits as on the analog input. The main advantage of the inputs not being restricted to the V_{DD} + 0.3 V limit is that power supply sequencing issues are avoided. If $\overline{CS}$ or SCLK are applied before V_{DD}, there is no risk of latch-up as there would be on the analog inputs if a signal greater than 0.3 V were applied prior to V_{DD}.

REFERENCE

An external source is required to supply the reference to the AD7441/AD7451. This reference input can range from 100 mV to V_{DD}. The specified reference is 2.5 V for the power supply range 2.7 V to 5.25 V. The reference input chosen for an application must never be greater than the power supply. Errors in the reference source result in gain errors in the AD7441/AD7451 transfer function and add to the specified full-scale errors of the part. A capacitor of at least 0.1 µF must be placed on the V_{REF} pin. Suitable reference sources for the AD7441/AD7451 include the AD780 and the ADR421. Figure 27 shows a typical connection diagram for the V_{REF} pin.

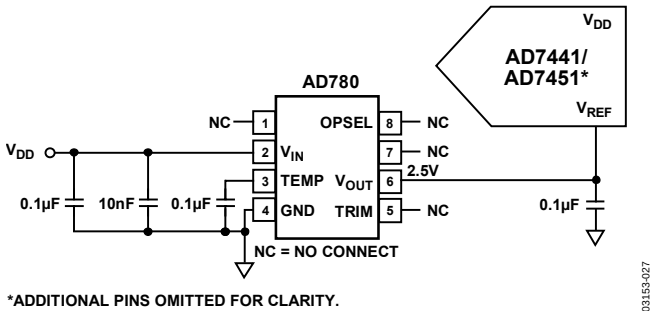

Figure 27. Typical V_{REF} Connection Diagram for V_{DD} = 5 V

SERIAL INTERFACE

Figure 2 and Figure 3 show detailed timing diagrams for the serial interface of the AD7451 and the AD7441, respectively. The serial clock provides the conversion clock and also controls the transfer of data from the device during conversion.

$\overline{CS}$ initiates the conversion process and frames the data transfer. The falling edge of $\overline{CS}$ puts the track-and-hold into hold mode and takes the bus out of three-state. The analog input is sampled and the conversion initiated at this point. The conversion requires 16 SCLK cycles to complete.

Once 13 SCLK falling edges have occurred, the track-and-hold goes back into track mode on the next SCLK rising edge, as shown at Point B in Figure 2 and Figure 3. On the 16th SCLK falling edge, the SDATA line goes back into three-state.

If the rising edge of $\overline{CS}$ occurs before 16 SCLKs have elapsed, the conversion is terminated and the SDATA line goes back into three-state.

The conversion result from the AD7441/AD7451 is provided on the SDATA output as a serial data stream. The bits are clocked out on the falling edge of the SCLK input. The data stream of the AD7451 consists of four leading zeros followed by 12 bits of conversion data, provided MSB first. The data stream of the AD7441 consists of four leading zeros, followed by the 10 bits of conversion data, followed by two trailing zeros, which is also provided MSB first. In both cases, the output coding is straight (natural) binary.

Sixteen serial clock cycles are required to perform a conversion and to access data from the AD7441/AD7451. $\overline{CS}$ going low provides the first leading zero to be read in by the DSP or the microcontroller. The remaining data is then clocked out on the subsequent SCLK falling edges, beginning with the second leading zero. Thus, the first falling clock edge on the serial clock provides the second leading zero. The final bit in the data transfer is valid on the 16th falling edge, having been clocked out on the previous (15th) falling edge. Once the conversion is complete and the data has been accessed after the 16 clock cycles, it is important to ensure that, before the next conversion is initiated, enough time is left to meet the acquisition and quiet-time specifications (see the Timing Example 1 and Timing Example 2 sections). To achieve 1 MSPS with an 18 MHz clock, an 18-clock burst performs the conversion and leaves enough time before the next conversion for the acquisition and quiet time.

In applications with slower SCLKs, it is possible to read in data on each SCLK rising edge; that is, the first rising edge of SCLK after the $\overline{CS}$ falling edge has the leading zero provided, and the 15th SCLK edge has DB0 provided.

Timing Example 1

Having f_{SCLK} = 18 MHz and a throughput rate of 1 MSPS gives a cycle time of

$1/Throughput = 1/1{,}000{,}000 = 1\ \mu s$

A cycle consists of

$t_2 + 12.5\ (1/f_{SCLK}) + t_{ACQUISITION} = 1\ \mu s$

Therefore, if t_2 = 10 ns, then

10 ns + 12.5 (1/18 MHz) + $t_{ACQUISITION}$ = 1 µs
$t_{ACQUISITION}$ = 296 ns

This 296 ns satisfies the requirement of 290 ns for $t_{ACQUISITION}$.

From Figure 28, $t_{ACQUISITION}$ comprises

$2.5\ (1/f_{SCLK}) + t_8 = t_{QUIET}$

where t_8 = 35 ns. This allows a value of 122 ns for t_{QUIET}, satisfying the minimum requirement of 60 ns.

Timing Example 2

Having f_{SCLK} = 5 MHz and a throughput rate of 315 kSPS gives a cycle time of

$1/Throughput = 1/315{,}000 = 3.174\ \mu s$

A cycle consists of

$t_2 + 12.5\ (1/f_{SCLK}) + t_{ACQUISITION} = 3.174\ \mu s$

Therefore, if t_2 is 10 ns, then

10 ns + 12.5 (1/5 MHz) + $t_{ACQUISITION}$ = 3.174 µs
$t_{ACQUISITION}$ = 664 ns

This 664 ns satisfies the requirement of 290 ns for $t_{ACQUISITION}$.

From Figure 28, $t_{ACQUISITION}$ comprises

$2.5\ (1/f_{SCLK}) + t_8 = t_{QUIET}$

where t_8 = 35 ns. This allows a value of 129 ns for t_{QUIET}, satisfying the minimum requirement of 60 ns.

As in this example and with other slower clock values, the signal can already be acquired before the conversion is complete, but it is still necessary to leave 60 ns minimum t_{QUIET} between conversions. In Example 2, the signal is fully acquired at approximately Point C in Figure 28.

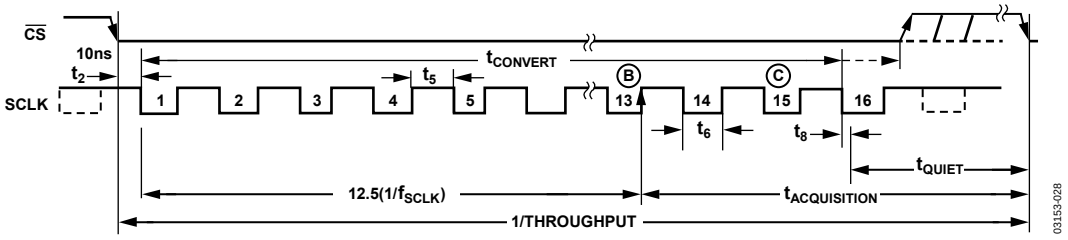

Figure 28. Serial Interface Timing Example

MODES OF OPERATION

The operating mode of the AD7441/AD7451 is selected by controlling the logic state of the $\overline{CS}$ signal during a conversion. There are two operating modes: normal mode and power-down mode. The point at which $\overline{CS}$ is pulled high after the conversion is initiated determines whether the part enters power-down mode. Similarly, if already in power-down, $\overline{CS}$ controls whether the device returns to normal operation or remains in power-down. These modes provide flexible power management options that can optimize the power dissipation/throughput rate ratio for differing application requirements.

NORMAL MODE

This mode is intended for fastest throughput rate performance. The user does not have to worry about any power-up times with the AD7441/AD7451 remaining fully powered up all the time. Figure 29 shows the general diagram of the operation of the AD7441/AD7451 in this mode. The conversion is initiated on the falling edge of $\overline{CS}$ (see the Serial Interface section). To ensure that the part remains fully powered up, $\overline{CS}$ must remain low until at least 10 SCLK falling edges elapse after the falling edge of $\overline{CS}$.

If $\overline{CS}$ is brought high any time after the 10th SCLK falling edge, but before the 16th SCLK falling edge, the part remains powered up, however the conversion is terminated and SDATA goes back into three-state. Sixteen serial clock cycles are required to complete the conversion and access the complete conversion result. $\overline{CS}$ can idle high until the next conversion or can idle low until sometime prior to the next conversion. Once a data transfer is complete—that is, when SDATA has returned to three-state—another conversion can be initiated after the quiet time, t_{QUIET}, elapses again bringing $\overline{CS}$ low.

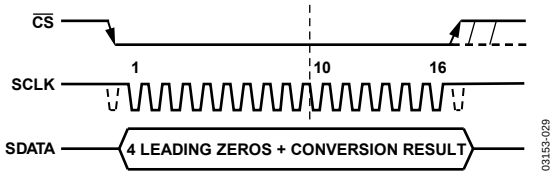

Figure 29. Normal Mode Operation

POWER-DOWN MODE

This mode is intended for use in applications where slower throughput rates are required; either the ADC is powered down between each conversion or a series of conversions can be performed at a high throughput rate and the ADC is then powered down for a relatively long duration between these bursts of conversions. When the AD7441/AD7451 are in power-down mode, all analog circuitry is powered down. For the AD7441/AD7451 to enter power-down mode, the conversion process must be interrupted by bringing $\overline{CS}$ high anywhere after the second falling edge of SCLK and before the 10th falling edge of SCLK, as shown in Figure 30.

Once $\overline{CS}$ has been brought high in this window of SCLKs, the part enters power-down, the conversion that was initiated by the falling edge of $\overline{CS}$ is terminated, and SDATA goes back into three-state. The time from the rising edge of $\overline{CS}$ to SDATA three-state enabled is never greater than t_8 (see the Timing Specifications section). If $\overline{CS}$ is brought high before the second SCLK falling edge, the part remains in normal mode and does not power down. This avoids accidental power-down due to glitches on the $\overline{CS}$ line.

To exit power-down mode and power up the AD7441/AD7451 again, a dummy conversion is performed. On the falling edge of $\overline{CS}$, the device begins to power up and continues to do so as long as $\overline{CS}$ is held low until after the falling edge of the 10th SCLK. The device is fully powered up after 1 μs has elapsed and, as shown in Figure 31, valid data results from the next conversion.

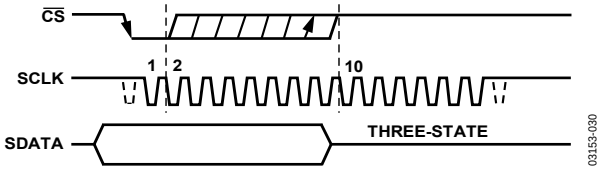

Figure 30. Entering Power-Down Mode

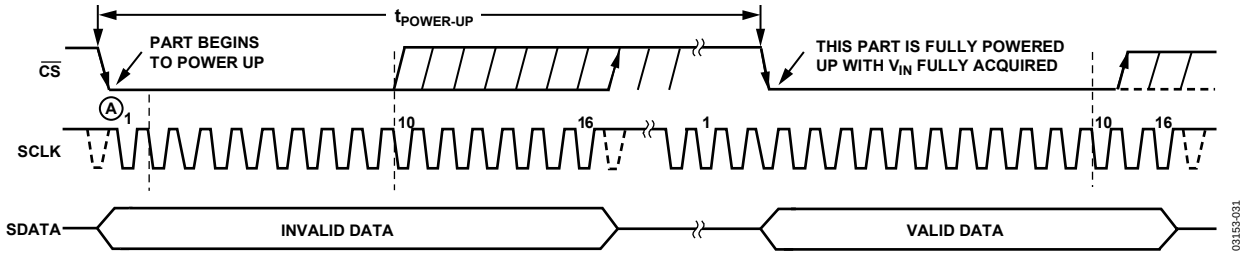

Figure 31. Exiting Power-Down Mode

If $\overline{CS}$ is brought high before the 10th falling edge of SCLK, the AD7441/AD7451 again go back into power-down. This avoids accidental power-up due to glitches on the $\overline{CS}$ line or an inadvertent burst of eight SCLK cycles while $\overline{CS}$ is low. So although the device may begin to power up on the falling edge of $\overline{CS}$, it again powers down on the rising edge of $\overline{CS}$ as long as it occurs before the 10th SCLK falling edge.

Power-Up Time

The power-up time of the AD7441/AD7451 is typically 1 µs, which means that with any frequency of SCLK up to 18 MHz, one dummy cycle is always sufficient to allow the device to power up. Once the dummy cycle is complete, the ADC is fully powered up and the input signal is acquired properly. The quiet time, t_{QUIET}, must still be allowed—from the point at which the bus goes back into three-state after the dummy conversion to the next falling edge of $\overline{CS}$.

When running at the maximum throughput rate of 1 MSPS, the AD7441/AD7451 power up and acquire a signal within ±0.5 LSB in one dummy cycle, that is, 1 µs. When powering up from the power-down mode with a dummy cycle, as in Figure 31, the track-and-hold, which was in hold mode while the part was powered down, returns to track mode after the first SCLK edge the part receives after the falling edge of $\overline{CS}$. This is shown as Point A in Figure 31.

Although at any SCLK frequency one dummy cycle is sufficient to power up the device and acquire V_{IN}, it does not necessarily mean that a full dummy cycle of 16 SCLKs must always elapse to power up the device and acquire V_{IN} fully; 1 µs is sufficient to power up the device and acquire the input signal.

For example, when a 5 MHz SCLK frequency is applied to the ADC, the cycle time is 3.2 µs (that is, 1/(5 MHz) × 16). In one dummy cycle, 3.2 µs, the part is powered up, and V_{IN} is acquired fully. However, after 1 µs with a five MHz SCLK, only five SCLK cycles elapse. At this stage, the ADC is fully powered up and the signal acquired. Therefore, in this case, the $\overline{CS}$ can be brought high after the 10th SCLK falling edge and brought low again after a time, t_{QUIET}, to initiate the conversion.

When power supplies are first applied to the AD7441/AD7451, the ADC can power up either in power-down mode or normal mode. For this reason, it is best to allow a dummy cycle to elapse to ensure that the part is fully powered up before attempting a valid conversion. Likewise, if the user wants the part to power up in power-down mode, then the dummy cycle can be used to ensure the device is in power-down mode by executing a cycle such as that shown in Figure 30. Once supplies are applied to the AD7441/AD7451, the power-up time is the same as that when powering up from power-down mode. It takes approximately 1 µs to power up fully in normal mode. It is not necessary to wait 1 µs before executing a dummy cycle to ensure the desired mode of operation. Instead, the dummy cycle can occur directly after power is supplied to the ADC. If the first valid conversion is then performed directly after the dummy conversion, care must be taken to ensure that adequate acquisition time has been allowed.

As mentioned earlier, when powering up from the power-down mode, the part returns to track mode upon the first SCLK edge applied after the falling edge of $\overline{CS}$. However, when the ADC powers up initially after supplies are applied, the track-and-hold is already in track mode. This means (assuming one has the facility to monitor the ADC supply current) that if the ADC powers up in the desired mode of operation, a dummy cycle is not required to change mode. Thus, a dummy cycle is also not required to place the track-and-hold into track.

POWER VS. THROUGHPUT RATE

By using the power-down mode on the device when not converting, the average power consumption of the ADC decreases at lower throughput rates. Figure 32 shows how, as the throughput rate is reduced, the device remains in its power-down state longer and the average power consumption reduces accordingly. For example, if the AD7441/AD7451 are operated in continuous sampling mode with a throughput rate of 100 kSPS and an SCLK of 18 MHz, and the device is placed in the power-down mode between conversions, then the power consumption during normal operation equals 9.25 mW maximum (for V_{DD} = 5 V).

If the power-up time is one dummy cycle (1 µs) and the remaining conversion time is another cycle (1 µs), then the AD7441/AD7451 can be said to dissipate 9.25 mW for 2 µs during each conversion cycle. (This power consumption figure assumes a very short time to enter power-down mode. This power figure increases as the burst of clocks used to enter power-down mode is increased). The AD7441/AD7451 consume just 5 µW for the remaining 8 µs.

Calculate the power numbers in Figure 32 as follows:

If the throughput rate = 100 kSPS, then the cycle time = 10 µs, and the average power dissipated during each cycle is

(2/10) × 9.25 mW = 1.85 mW

For the same scenario, if V_{DD} = 3 V, the power dissipation during normal operation is 4 mW maximum.

The AD7441/AD7451 can now be said to dissipate 4 mW for 2 µs during each conversion cycle.

The average power dissipated during each cycle with a throughput rate of 100 kSPS is, therefore,

(2/10) × 4 mW = 0.8 mW

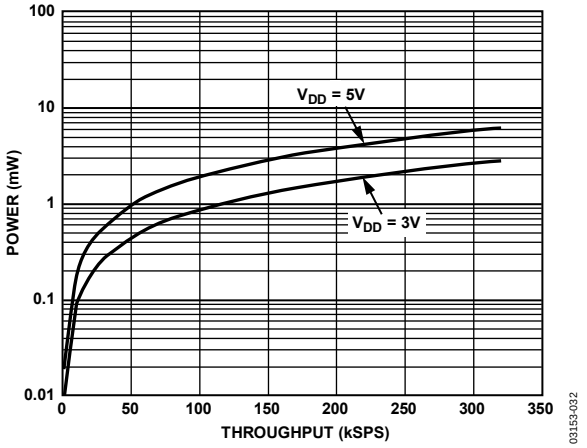

Figure 32. Power vs. Throughput Rate for Power-Down Mode

For optimum power performance in throughput rates above 320 kSPS, it is recommended that the serial clock frequency be reduced.

MICROPROCESSOR AND DSP INTERFACING

The serial interface on the AD7441/AD7451 allows the part to be connected directly to a range of different microprocessors. This section explains how to interface the AD7441/AD7451 with some of the more common microcontroller and DSP serial interface protocols.

AD7441/AD7451 to ADSP-21xx

The ADSP-21xx family of DSPs is interfaced directly to the AD7441/AD7451 without any glue logic required. The SPORT control register is set up as follows:

TFSW = RFSW = 1	Alternate framing
INVRFS = INVTFS = 1	Active low frame signal
DTYPE = 00	Right justify data
SLEN = 1111	16-bit data-words
ISCLK = 1	Internal serial clock
TFSR = RFSR = 1	Frame every word
IRFS = 0	
ITFS = 1	

To implement power-down mode, SLEN is set to 1001 to issue an 8-bit SCLK burst.

The connection diagram is shown in Figure 33. ADSP-21xx has the TFS and RFS of the SPORT tied together, with TFS set as an output and RFS set as an input. The DSP operates in alternate framing mode, and the SPORT control register is set up as described. The frame synchronization signal generated on the TFS is tied to $\overline{CS}$, and, as with all signal processing applications, equidistant sampling is necessary. However, in this example, the timer interrupt is used to control the sampling rate of the ADC, and, under certain conditions, equidistant sampling cannot be achieved.

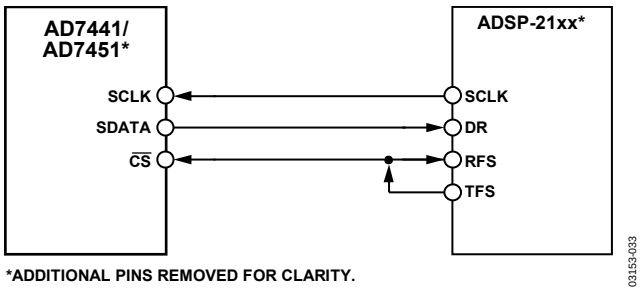

Figure 33. Interfacing to the ADSP-21xx

The timer registers, for example, are loaded with a value that provides an interrupt at the required sample interval. When an interrupt is received, a value is transmitted with TFS/DT (ADC control word). The TFS is used to control the RFS and, therefore, the reading of data. The frequency of the serial clock is set in the SCLKDIV register. When the instruction to transmit with TFS is given, that is, AX0 = TX0, the state of the SCLK is checked. The DSP waits until the SCLK has gone high, low, and high before starting transmission. If the timer and SCLK values are chosen such that the instruction to transmit occurs on or near the rising edge of SCLK, then the data can either be transmitted or wait until the next clock edge.

For example, the ADSP-2111 has a master clock frequency of 16 MHz. If the SCLKDIV register is loaded with the value of 3, an SCLK of 2 MHz is obtained and eight master clock periods elapse for every one SCLK period. If the timer registers are loaded with the value 803, 100.5 SCLKs occur between interrupts and subsequently between transmit instructions. This situation results in nonequidistant sampling, because the transmit instruction occurs on an SCLK edge. If the number of SCLKs between interrupts is a whole integer figure of N, equidistant sampling is implemented by the DSP.

AD7441/AD7451 to TMS320C5x/C54x

The serial interface on the TMS320C5x/C54x uses a continuous serial clock and frame synchronization signals to synchronize the data transfer operations with peripheral devices such as the AD7441/AD7451. The $\overline{CS}$ input allows easy interfacing between the TMS320C5x/C54x and the AD7441/AD7451 without any glue logic required. The serial port of the TMS320C5x/C54x is set up to operate in burst mode with internal CLKx (Tx serial clock) and FSx (Tx frame sync). The serial port control register (SPC) must have the following setup: FO = 0, FSM = 1, MCM = 1, and TXM = 1. The format bit, FO, can be set to 1 to set the word length to eight bits in order to implement the power-down mode on the AD7441/AD7451. The connection diagram is shown in Figure 34. Note that for signal processing applications, the frame synchronization signal from the TMS320C5x/ C54x must provide equidistant sampling.

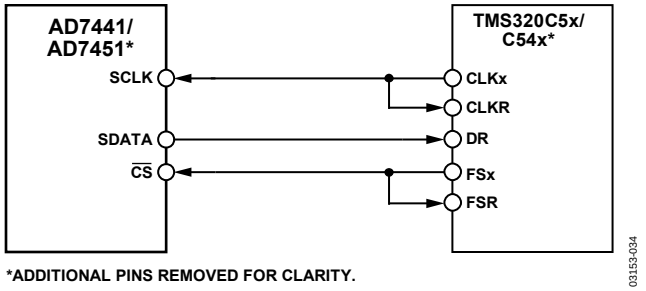

*ADDITIONAL PINS REMOVED FOR CLARITY.

Figure 34. Interfacing to the TMS320C5x/C54x

AD7441/AD7451 to DSP56xxx

The connection diagram in Figure 35 shows how the AD7441/AD7451 can be connected to the SSI (synchronous serial interface) of the DSP56xxx family of DSPs from Motorola. The SSI is operated in synchronous mode (SYN bit in CRB = 1) with internally generated 1-bit clock period frame sync for both Tx and Rx (Bit FSL1 = 1 and Bit FSL0 = 0 in CRB). Set the word length to 16 by setting Bit WL1 = 1 and Bit WL0 = 0 in CRA. To implement the power-down mode on the AD7441/AD7451, the word length can be changed to eight bits by setting B it WL1 = 0 and Bit WL0 = 0 in CRA. Note that for signal processing applications, the frame synchronization signal from the DSP56xxx must provide equidistant sampling.

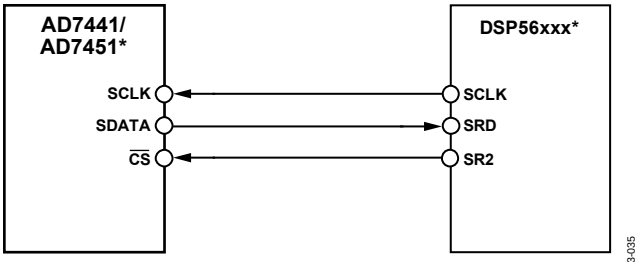

*ADDITIONAL PINS REMOVED FOR CLARITY.

Figure 35. Interfacing to the DSP56xxx

GROUNDING AND LAYOUT HINTS

The printed circuit board that houses the AD7441/AD7451 must be designed so that the analog and digital sections are separated and confined to certain areas of the board. This facilitates the use of ground planes that can be easily separated. A minimum etch technique is generally best for ground planes, as it gives the best shielding. Digital and analog ground planes must be joined in only one place: a star ground point established as close to the GND pin on the AD7441/AD7451 as possible.

Avoid running digital lines under the device, as this couples noise onto the die. The analog ground plane must be allowed to run under the AD7441/AD7451 to avoid noise coupling. The power supply lines to the AD7441/AD7451 must use as large a trace as possible to provide low impedance paths and reduce the effects of glitches on the power supply line.

Fast switching signals like clocks must be shielded with digital grounds to avoid radiating noise to other sections of the board, and clock signals must never run near the analog inputs. Avoid crossover of digital and analog signals. Traces on opposite sides of the board must run at right angles to each other. This reduces the effects of feedthrough on the board. A microstrip technique is by far the best but is not always possible with a double-sided board. In this technique, the component side of the board is dedicated to ground planes while signals are placed on the solder side. Good decoupling is also important. All analog supplies must be decoupled with 10 μF tantalum capacitors in parallel with 0.1 μF capacitors to GND. To achieve the best from these decoupling components, they must be placed as close as possible to the device.

EVALUATING PERFORMANCE

The evaluation board package includes a fully assembled and tested evaluation board, documentation, and software for controlling the board from a PC via the evaluation board controller. The evaluation board controller can be used in conjunction with the AD7441 and the AD7451 evaluation boards, as well as with many other Analog Devices, Inc. evaluation boards ending with the CB designator, to demonstrate and evaluate the ac and dc performance of the AD7441 and the AD7451.

The software allows the user to perform ac (fast Fourier transform) and dc (histogram of codes) tests on the AD7441/AD7451. See the AD7441/AD7451 application note that accompanies the evaluation kit for more information.

OUTLINE DIMENSIONS

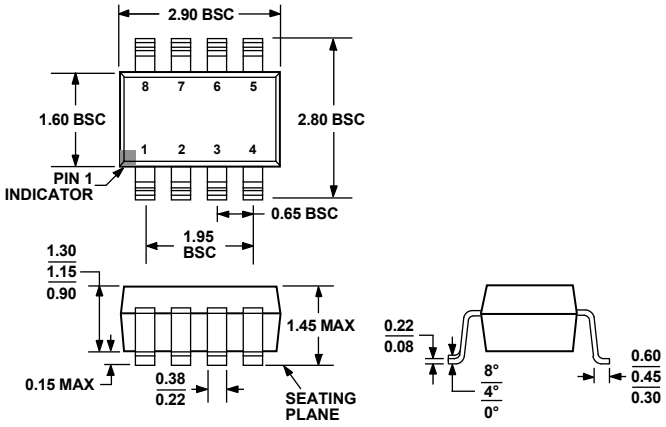

COMPLIANT TO JEDEC STANDARDS MO-178-BA

Figure 36. 8-Lead Small Outline Transistor Package [SOT-23]
(RJ-8)
Dimensions shown in millimeters

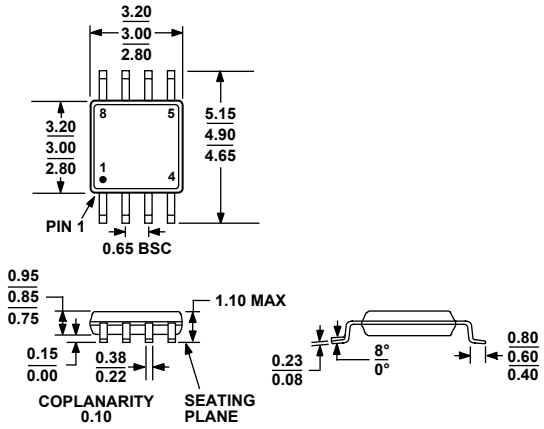

COMPLIANT TO JEDEC STANDARDS MO-187-AA

Figure 37. 8-Lead Mini Small Outline Package [MSOP]
(RM-8)
Dimensions shown in millimeters

ORDERING GUIDE

Model	Temperature Range	Linearity Error (LSB)[1]	Package Description	Package Option	Branding
AD7451ART-R2	−40°C to +85°C	± 1.5	8-Lead SOT-23	RJ-8	CSA
AD7451ART-REEL7	−40°C to +85°C	± 1.5	8-Lead SOT-23	RJ-8	CSA
AD7451ARTZ-REEL7[2]	−40°C to +85°C	± 1.5	8-Lead SOT-23	RJ-8	C3T
AD7451ARM	−40°C to +85°C	± 1.5	8-Lead MSOP	RM-8	CSA
AD7451ARM-REEL7	−40°C to +85°C	± 1.5	8-Lead MSOP	RM-8	CSA
AD7451ARMZ[2]	−40°C to +85°C	± 1.5	8-Lead MSOP	RM-8	C3T
AD7451BRT-R2	−40°C to +85°C	± 1	8-Lead SOT-23	RJ-8	C05
AD7451BRT-REEL7	−40°C to +85°C	± 1	8-Lead SOT-23	RJ-8	C05
AD7451BRTZ-REEL7[2]	−40°C to +85°C	± 1	8-Lead SOT-23	RJ-8	C3U
AD7451BRM	−40°C to +85°C	± 1	8-Lead MSOP	RM-8	C05
AD7451BRM-REEL7	−40°C to +85°C	± 1	8-Lead MSOP	RM-8	C05
AD7451BRMZ[2]	−40°C to +85°C	± 1	8-Lead MSOP	RM-8	C3U
AD7441BRT-R2	−40°C to +85°C	± 0.5	8-Lead SOT-23	RJ-8	C0F
AD7441BRT-REEL7	−40°C to +85°C	± 0.5	8-Lead SOT-23	RJ-8	C0F
AD7441BRTZ-R2[2]	−40°C to +85°C	± 0.5	8-Lead SOT-23	RJ-8	C4M
AD7441BRTZ-REEL7[2]	−40°C to +85°C	± 0.5	8-Lead SOT-23	RJ-8	C4M
AD7441BRM	−40°C to +85°C	± 0.5	8-Lead MSOP	RM-8	C0F
AD7441BRM-REEL7	−40°C to +85°C	± 0.5	8-Lead MSOP	RM-8	C0F
AD7441BRMZ[2]	−40°C to +85°C	± 0.5	8-Lead MSOP	RM-8	C4M
EVAL-AD7451CB[3]			Evaluation Board		
EVAL-AD7441CB[3]			Evaluation Board		
EVAL-CONTROL BRD2[4]			Controller Board		

[1] Linearity error here refers to integral nonlinearity error.
[2] Z = RoHS Compliant Part.
[3] This can be used as a standalone evaluation board or in conjunction with the evaluation board controller for evaluation/demonstration purposes.
[4] The evaluation board controller is a complete unit allowing a PC to control and communicate with all Analog Devices evaluation boards ending in the CB designators. To order a complete evaluation kit, you must order the ADC evaluation board (EVAL-AD7451CB or EVAL-AD7441CB), the EVAL-CONTROL BRD2, and a 12 V ac transformer. See the AD7451/AD7441 application note that accompanies the evaluation kit for more information.

©2003–2007 Analog Devices, Inc. All rights reserved. Trademarks and registered trademarks are the property of their respective owners.
C03153-0-3/07(C)